WATER-COOLED BEAM STOPPER

Application

The *Water-cooled beam stopper* is a safety component produced for "Sincrotrone di Trieste (ITALY)".
The main scope of this component is to stop the incident beam by means of a dedicated water-cooled copper block. This component is characterized by two operating modes (open/closed). The vertical movement between the open position and the closed position is driven by a pneumatic actuator, dimensioned according to the weight of in-vacuum components and to vacuum forces.
The beam stopper is constructed in order to fall in the closed position in case of failures of the electrical system or pressure drops of the pneumatic system.

Summary

1 References 1
2 CECOM activities 1
2.1 Materials 2
2.2 Manufacturing, assembling and vacuum test 2
2.3 Final tests 3
3 Pictures and reference drawings 4

1 References

This product was produced, tested and delivered by CECOM for "Sincrotrone di Trieste" (Trieste – ITALY). The references of contact persons for this work are available under request.

2 CECOM activities

CECOM carried out the following activities:

- Review of manufacturing drawings (engineering design and development of tools and equipments needed for the manufacturing).
- Purchase of raw materials and commercial components
- Manufacturing of components
- Assembling and welding
- Cleaning (for UHV application)
- Quality check:
  - Dimensional check of components and assembly
  - UHV leak test
  - Test of the hydraulic circuit
  - Test of pneumatic devices
  - Functional test under vacuum

2.1 Materials

Used materials:

- Stainless steel "AISI 316 L" for vessel walls, flanges and vacuum components
- OFHC copper for the copper absorber

2.2 Manufacturing, assembling and vacuum test

The most relevant items related to the machining and assembling of the device are:

- In-vacuum cooling system:
  - Bending of the cooling pipe
  - Brazing of the cooling pipe to the copper absorber block and to the ConFlat flange. The cooling pipe passes through the ConFlat flange, in order to avoid water-to-vacuum joints.
- In-vacuum temperature monitoring: a thermocouple is installed on the copper absorber block, and connected to the dedicated electrical feedthrough.

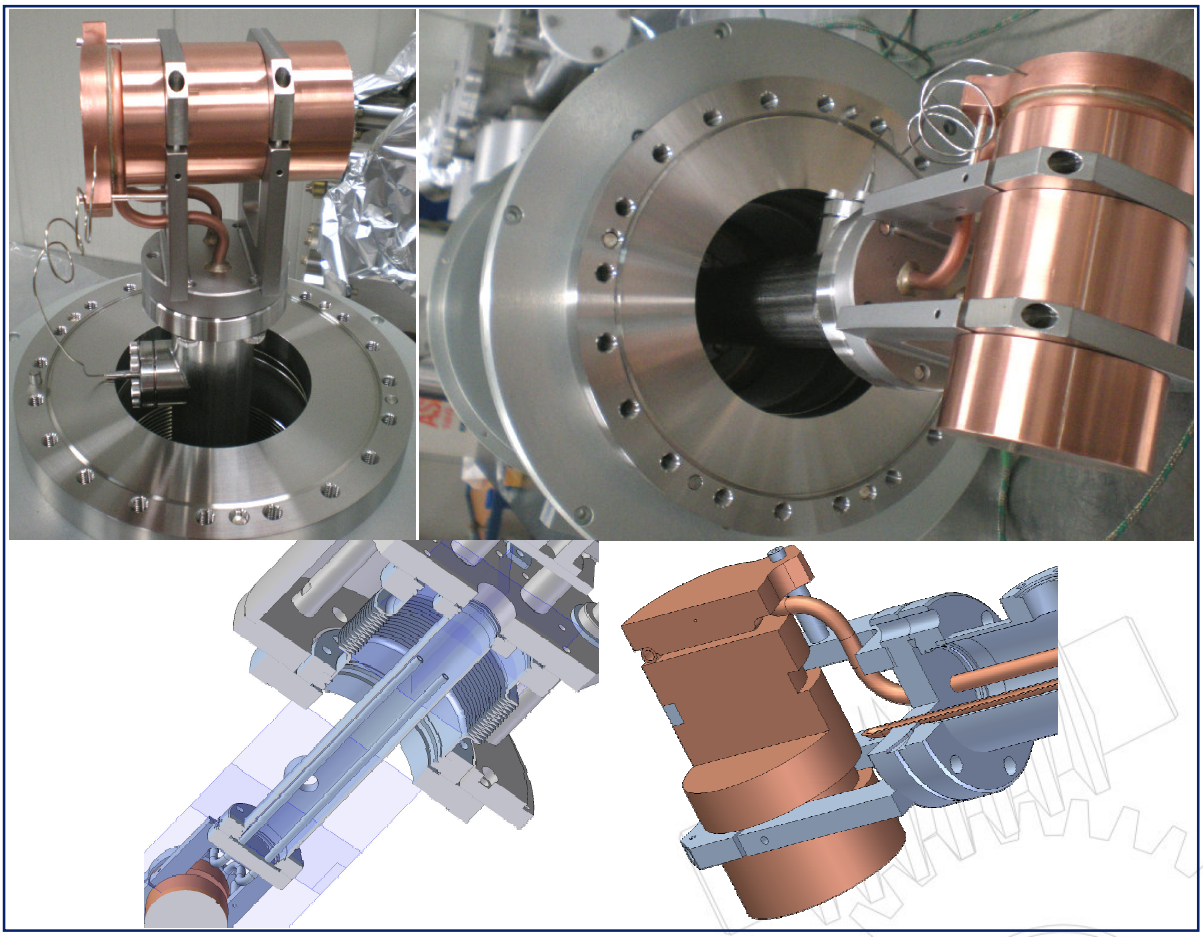

Fig. 1: Details of sub-assemblies during the assembling

All UHV components were assembled in clean room and the movement along the required vertical stroke was checked manually before the final installation on the support frame.

2.3 Final tests

The final check of the beam stopper was performed on the assembled module and the following tests were executed:

- Movement between the two operating modes and setting of end-limits for the open and the closed positions
- Movement of the shaft under-vacuum
- UHV leak test (leak rate lower than 1x10-10 mbar·l/s - Fig. 2)

Some relevant pictures of the assembled device are shown in section 3.
Reference drawings are shown in section 3.

Fig. 2: Pictures of the vacuum test of the assembly
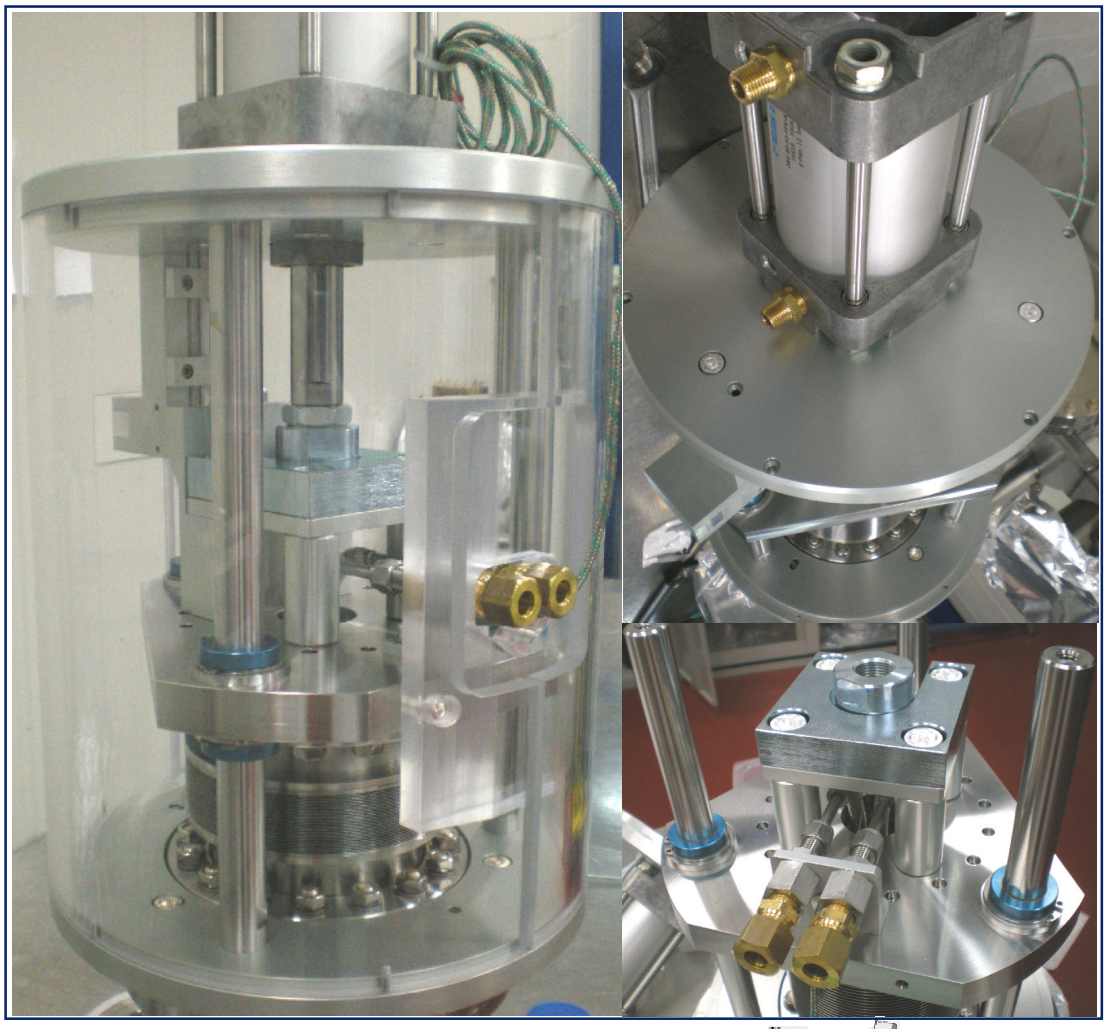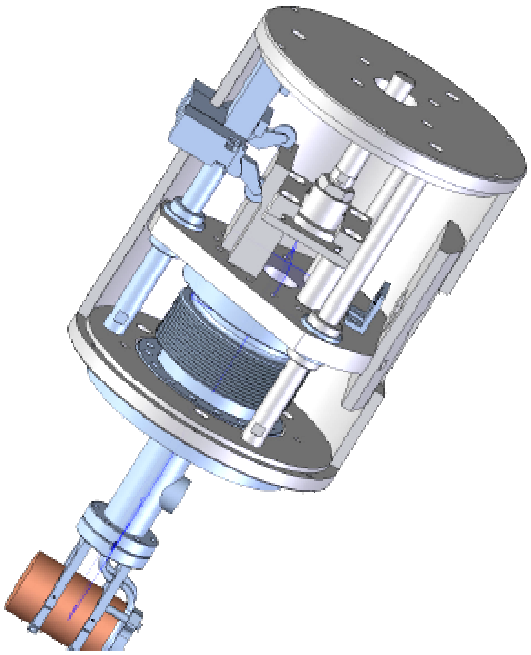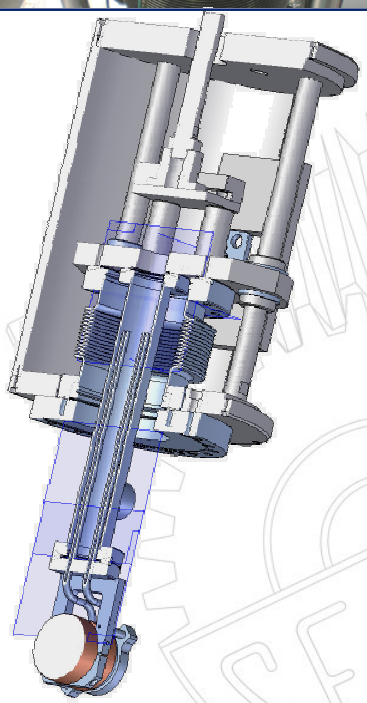
3 Pictures and reference drawings